Motor Arm Installation
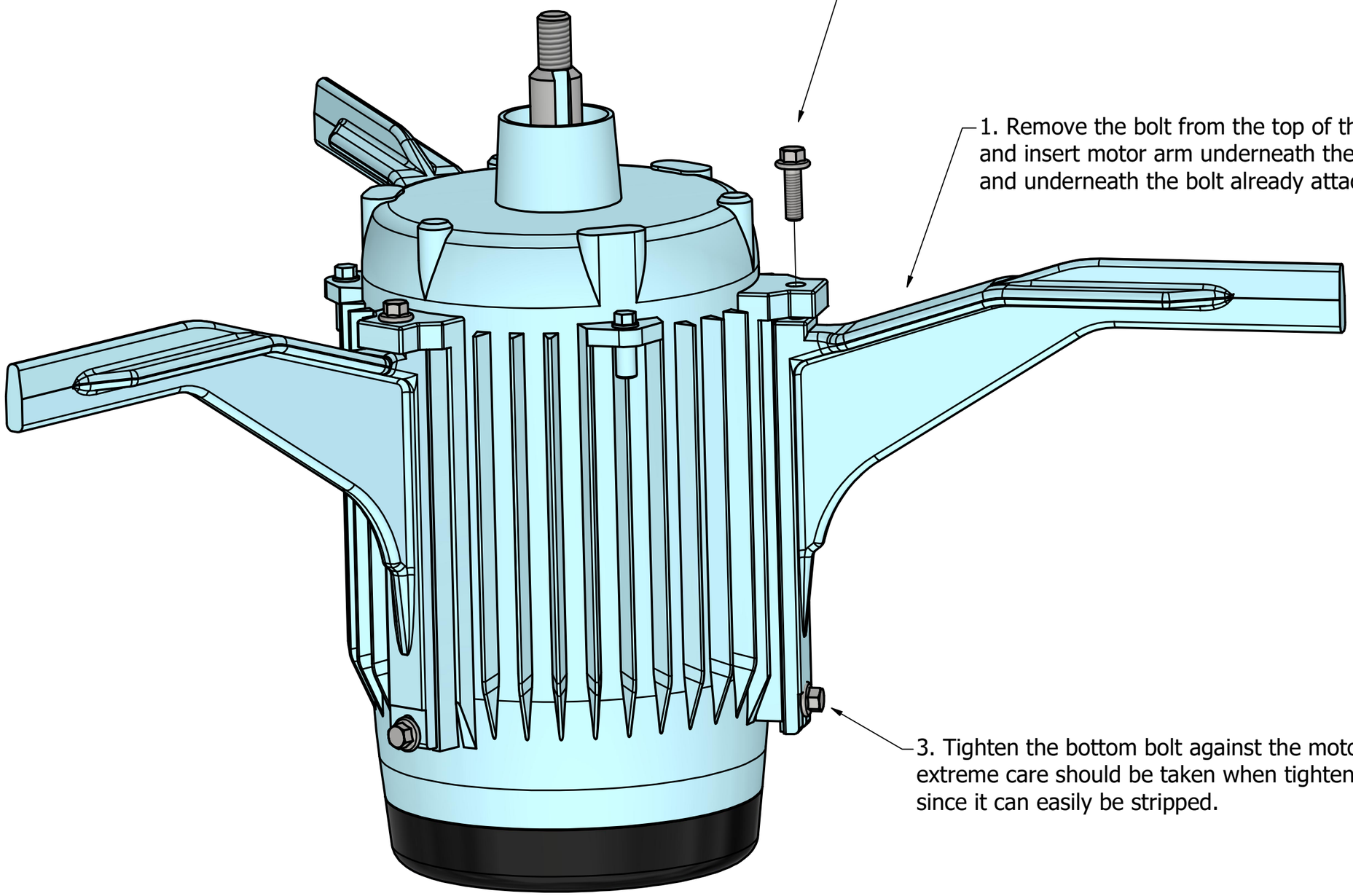
Multi-Fan Motors 10in-38in